
USS Defiant - Daniel Leidermark

1

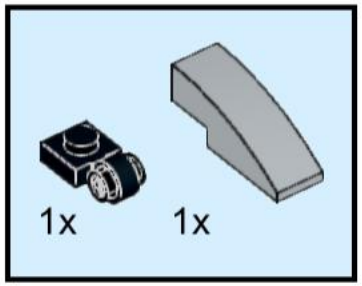

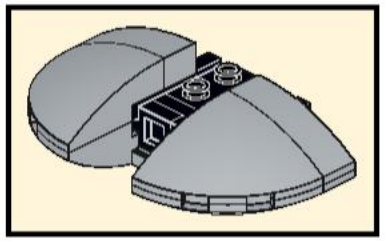

2

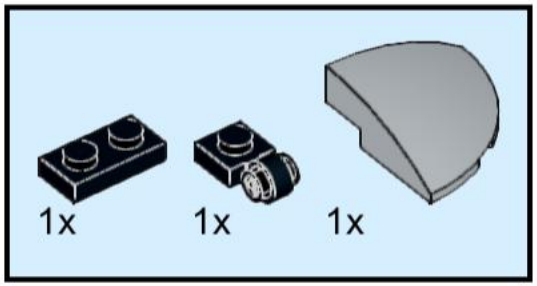

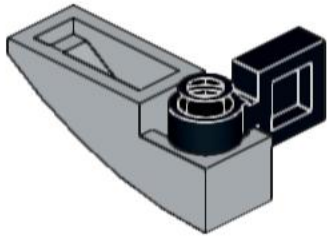

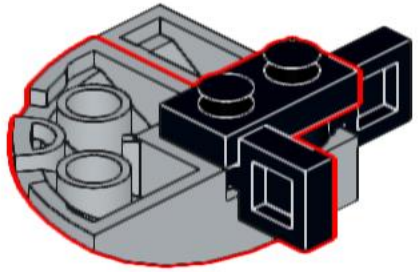

3

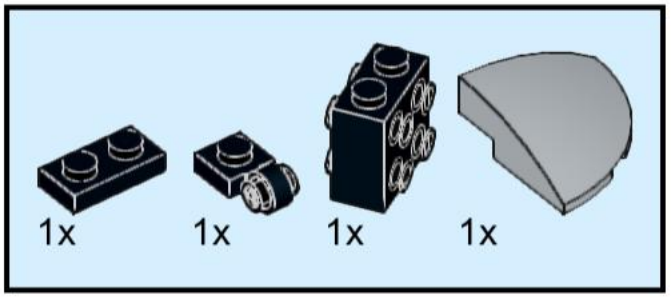

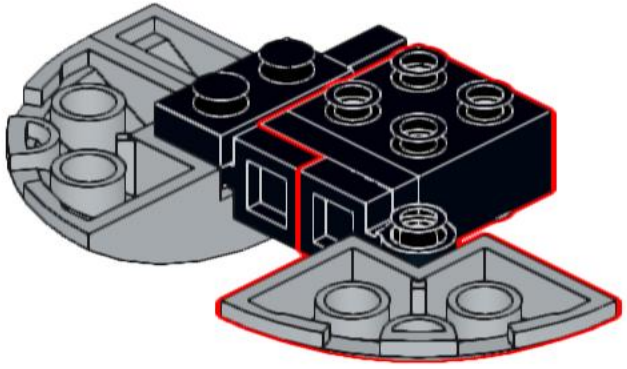

4

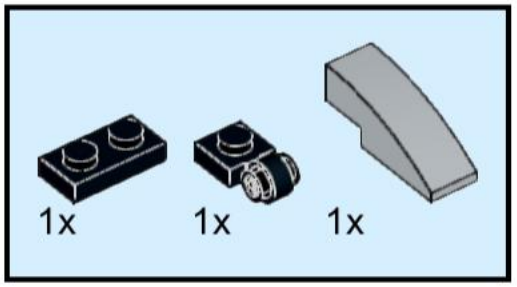

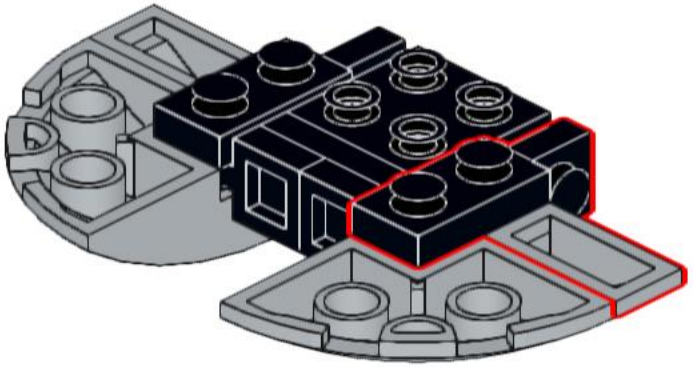

5

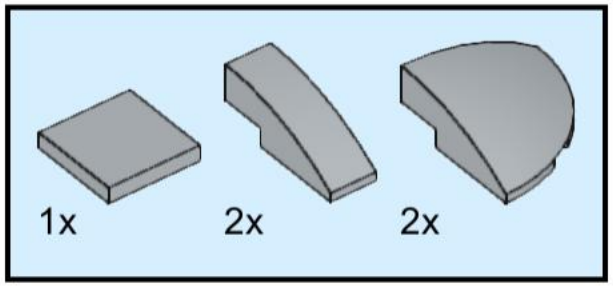

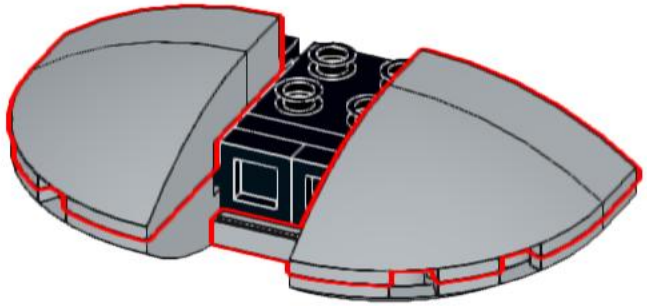

6

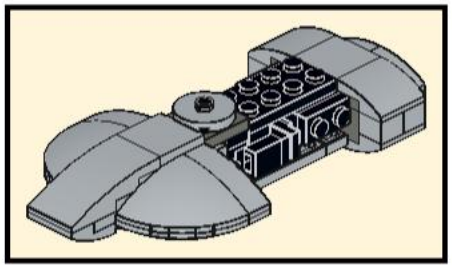

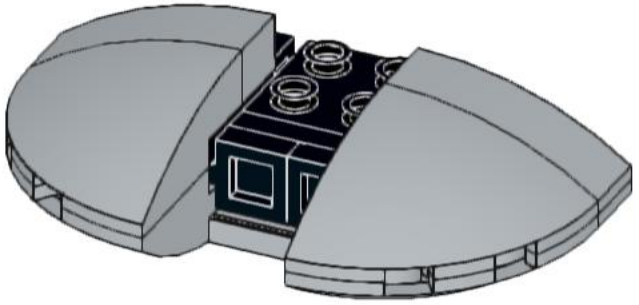

7

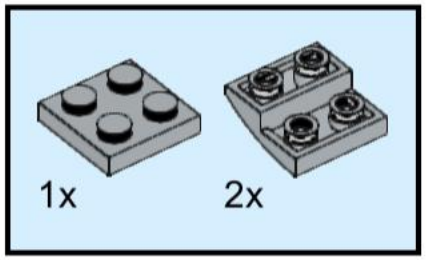

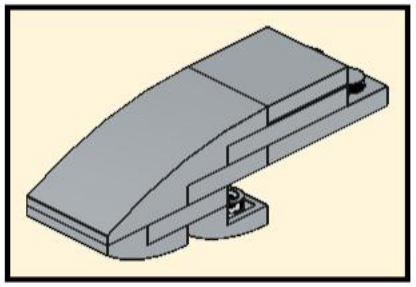

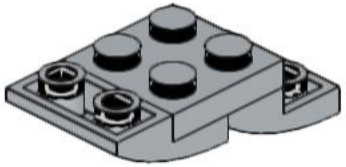

8

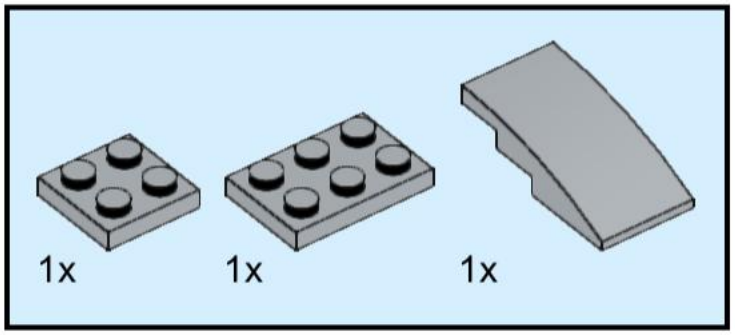

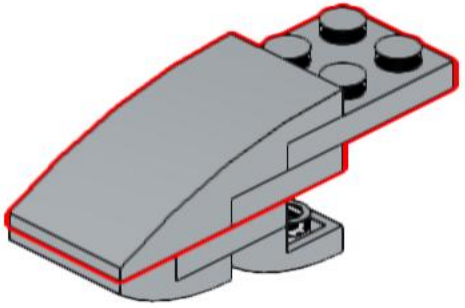

9

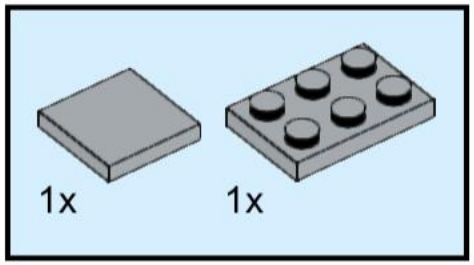

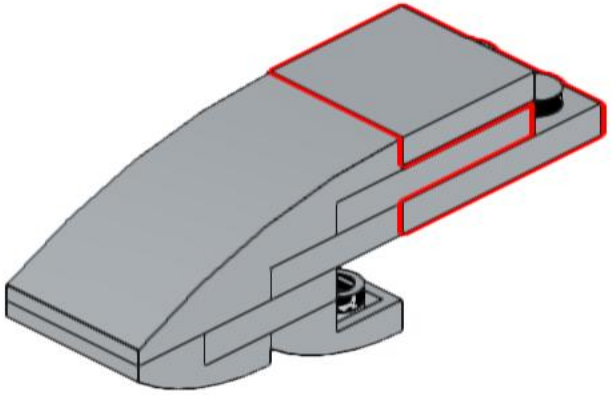

10

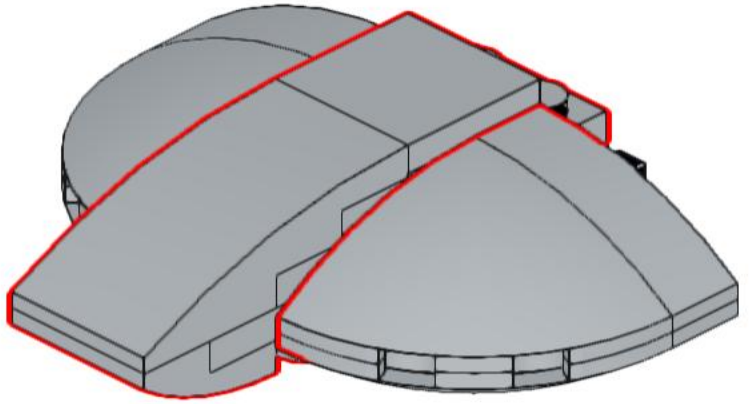

11

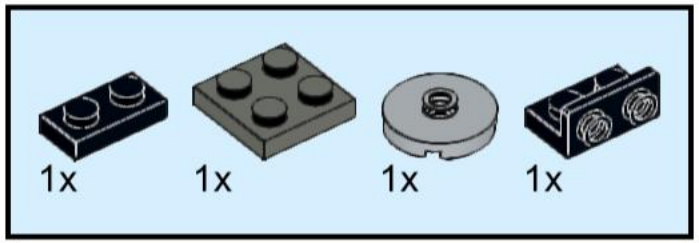

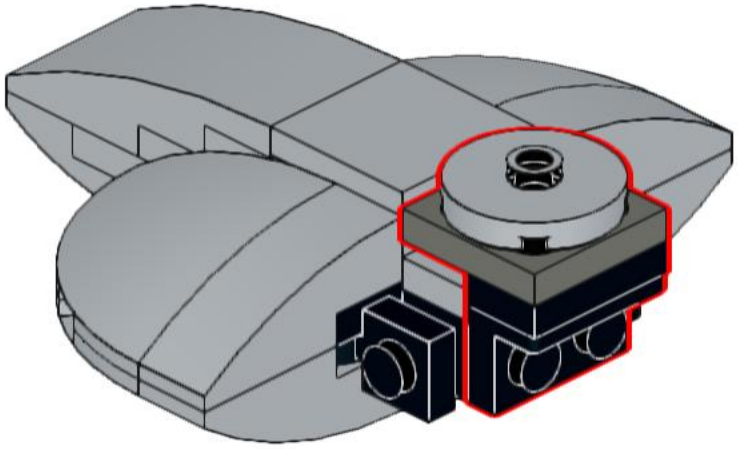

12

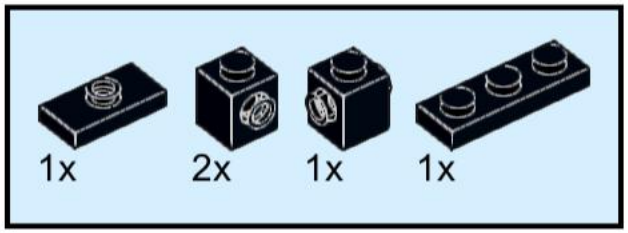

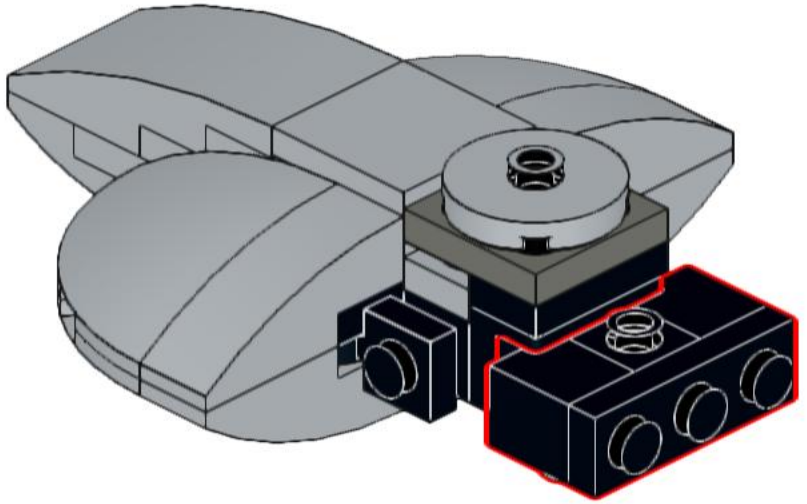

13

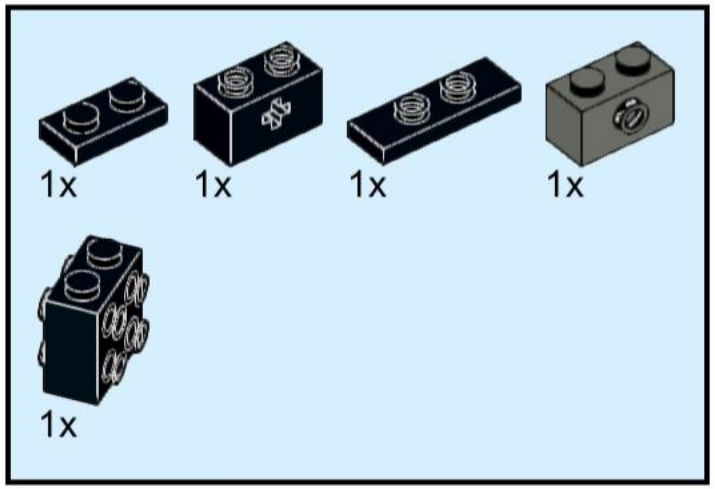

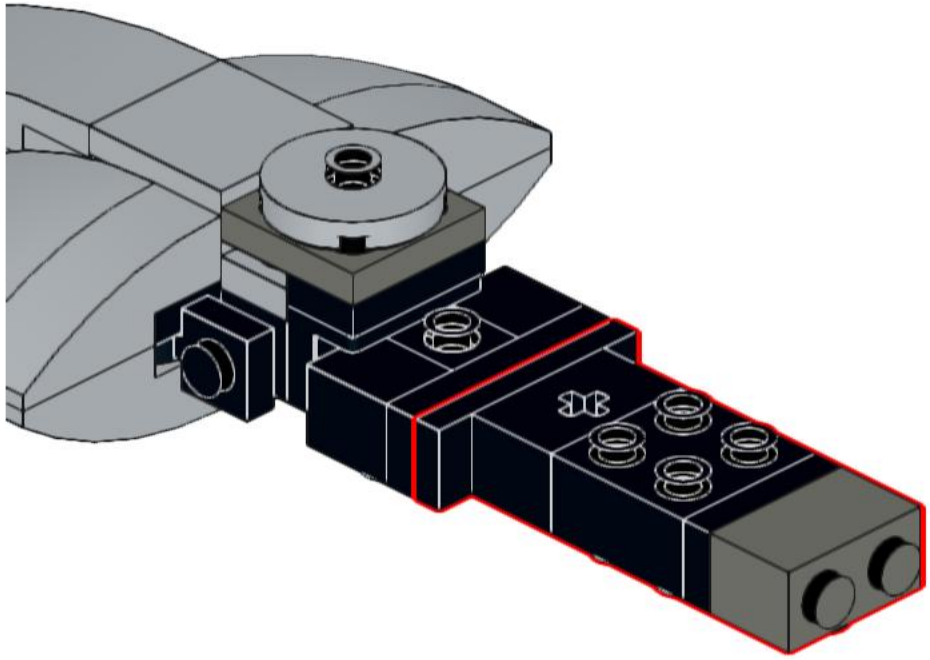

14

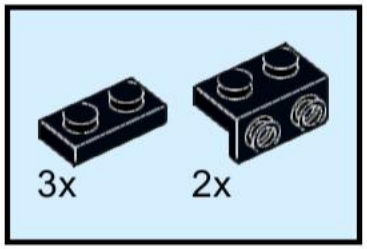

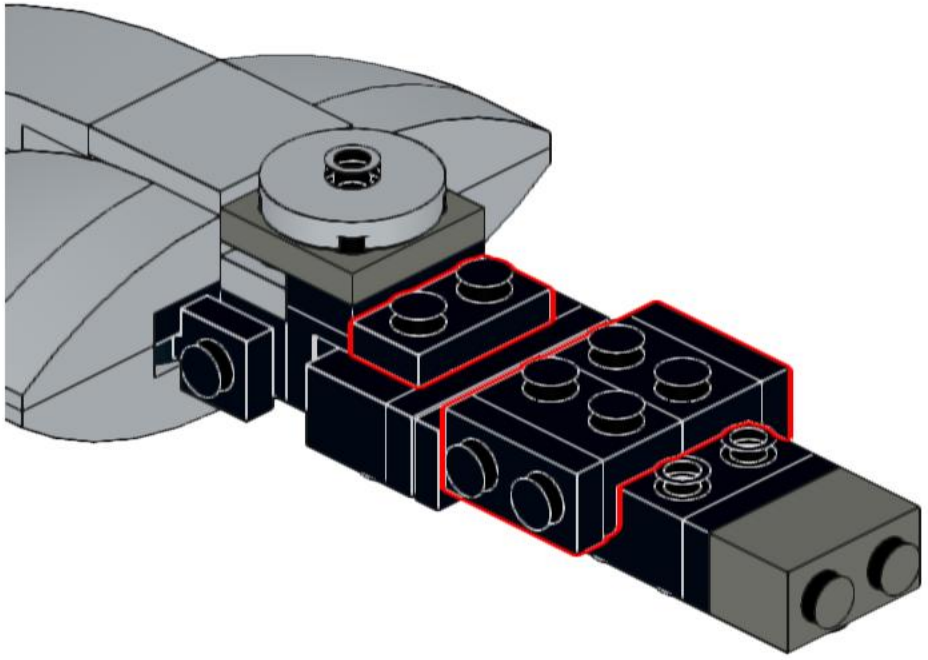

15

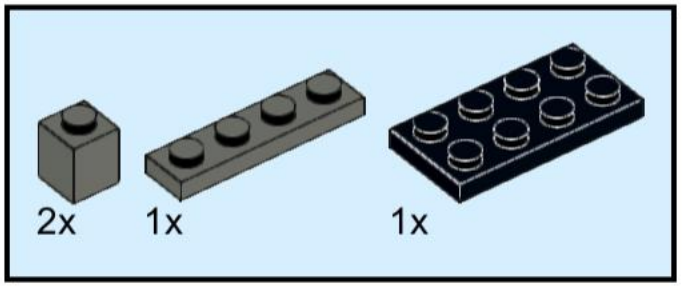

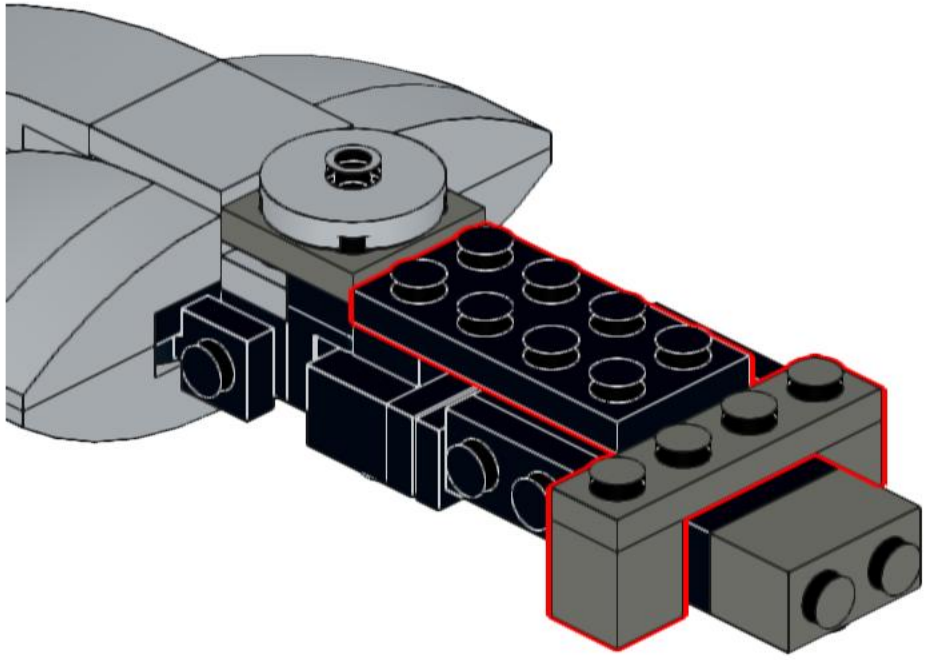

16

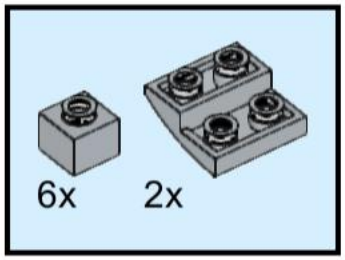

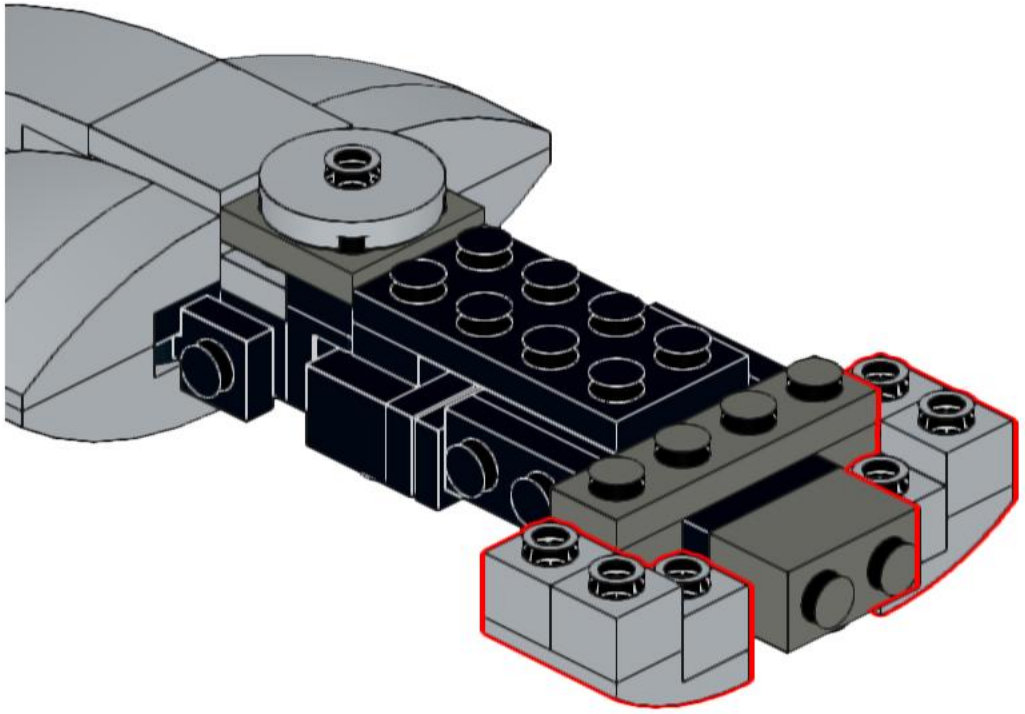

17

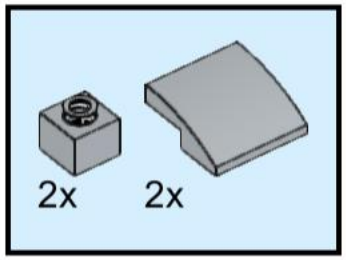

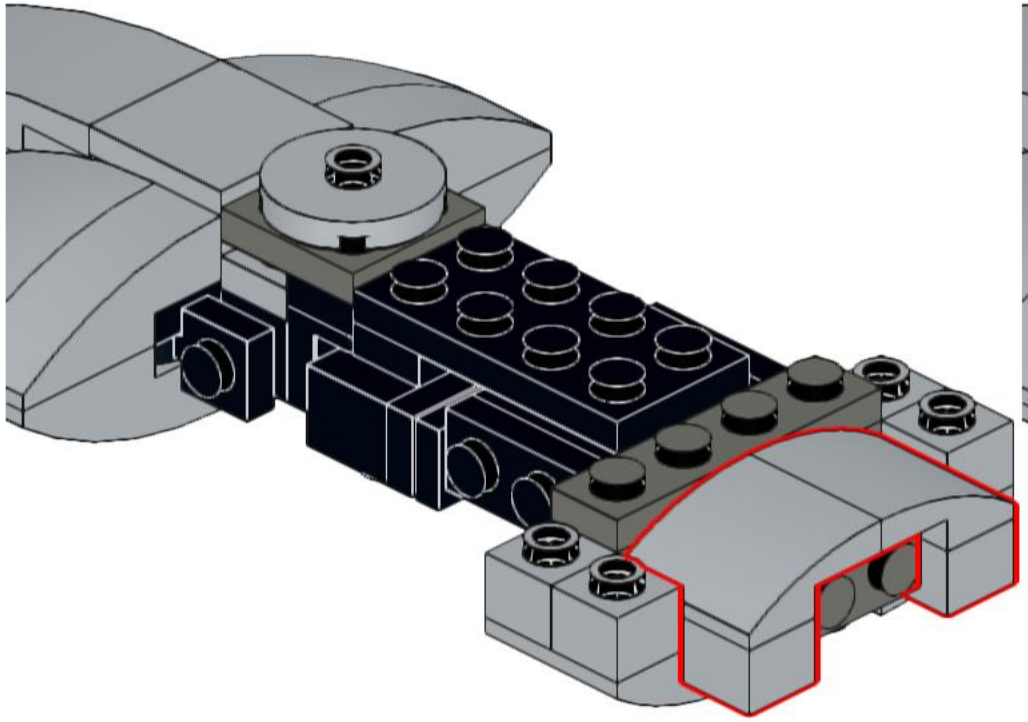

18

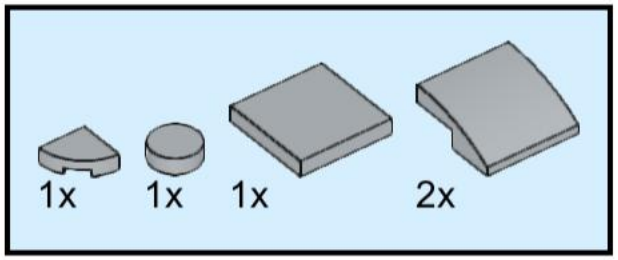

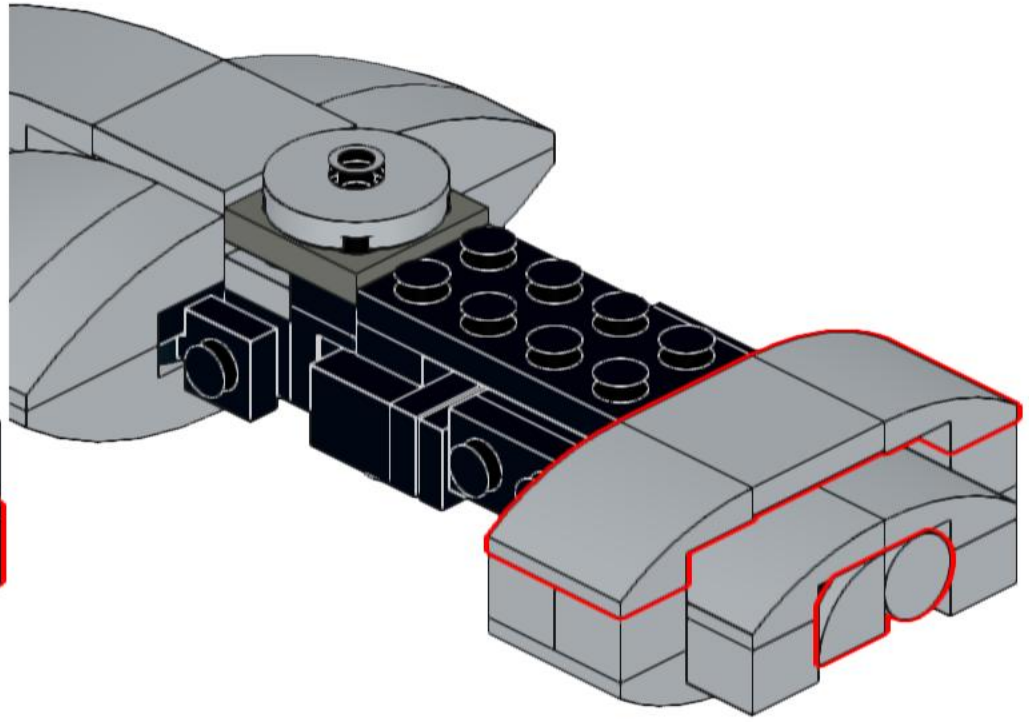

19

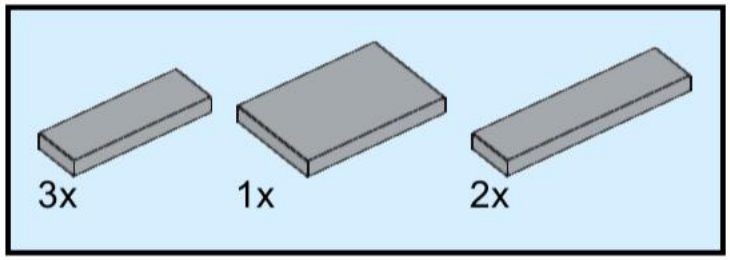

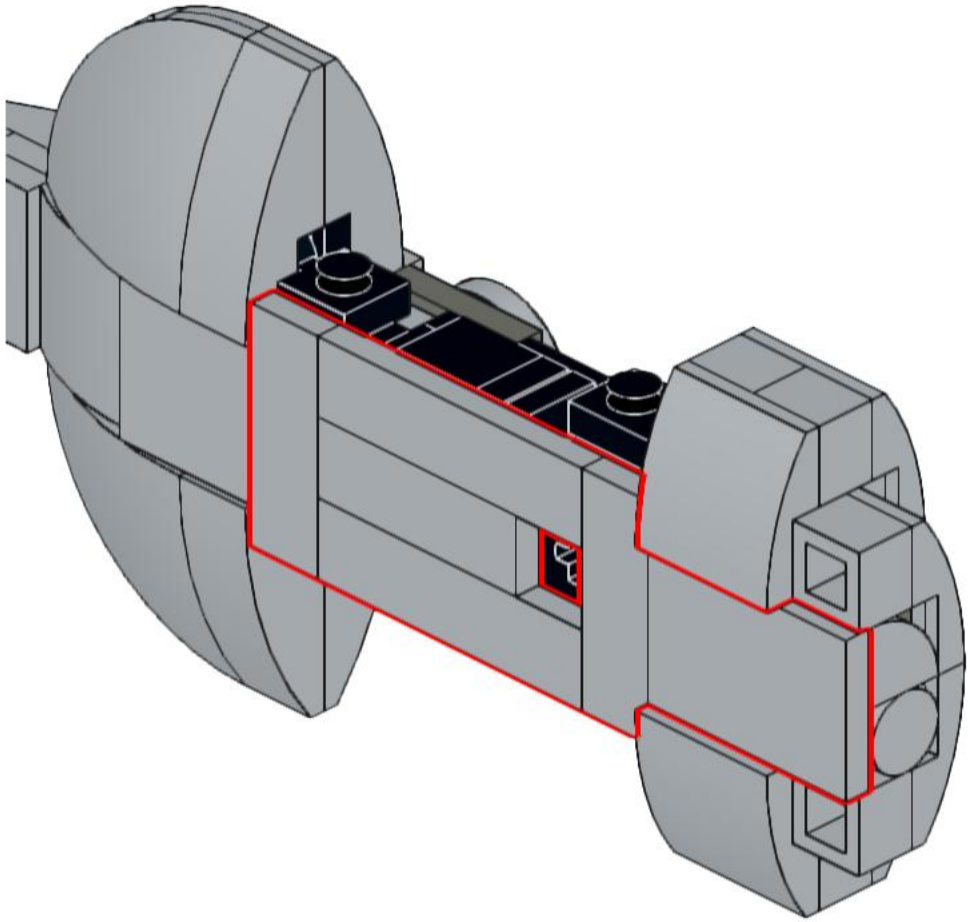

20

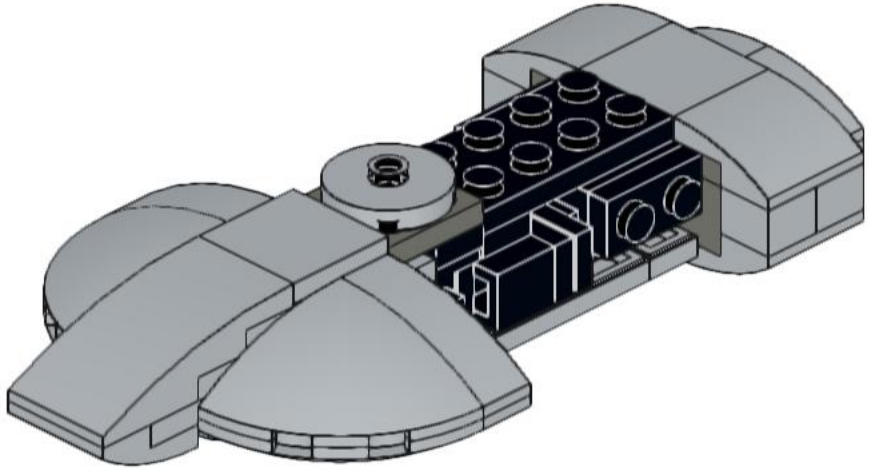

21

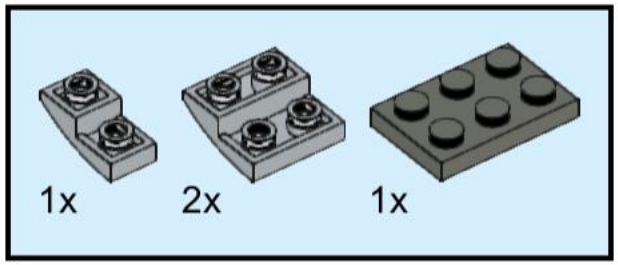

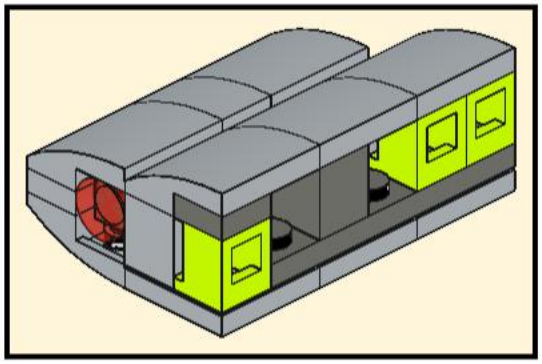

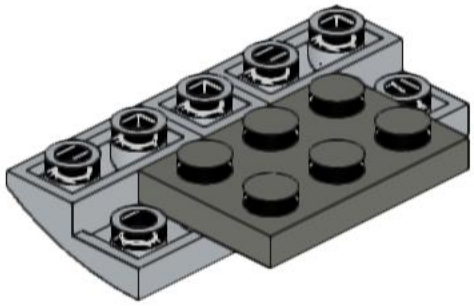

22

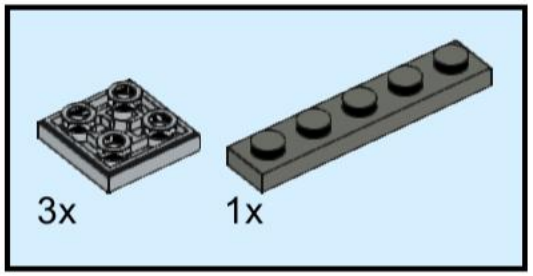

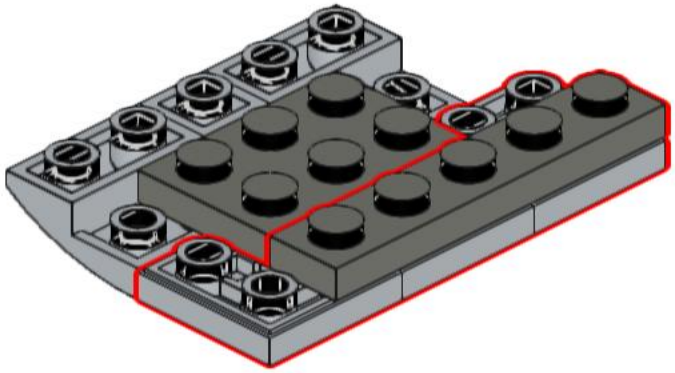

23

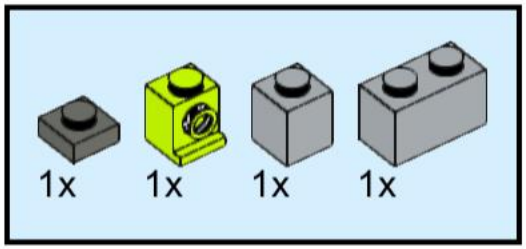

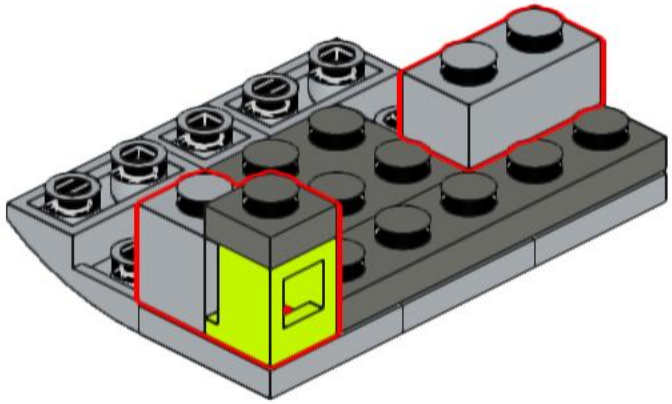

24

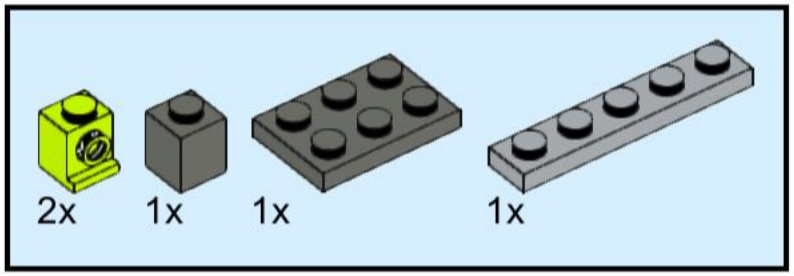

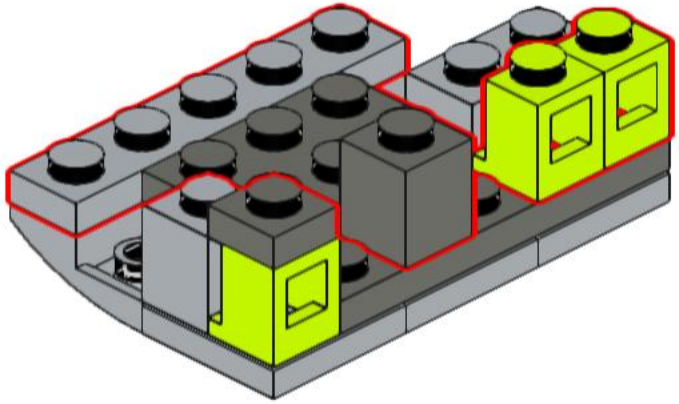

25

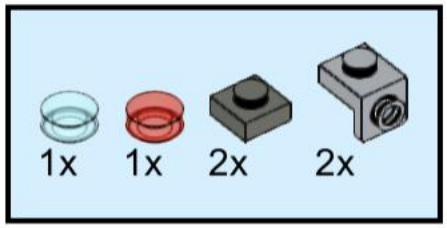

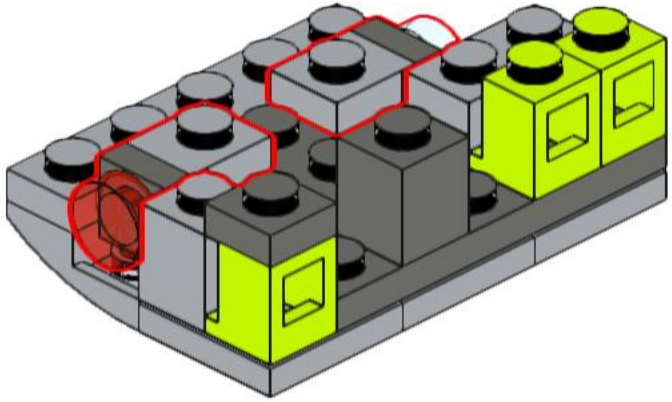

26

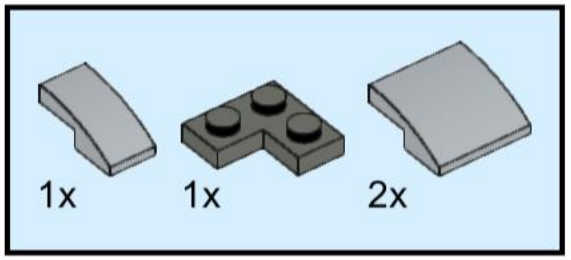

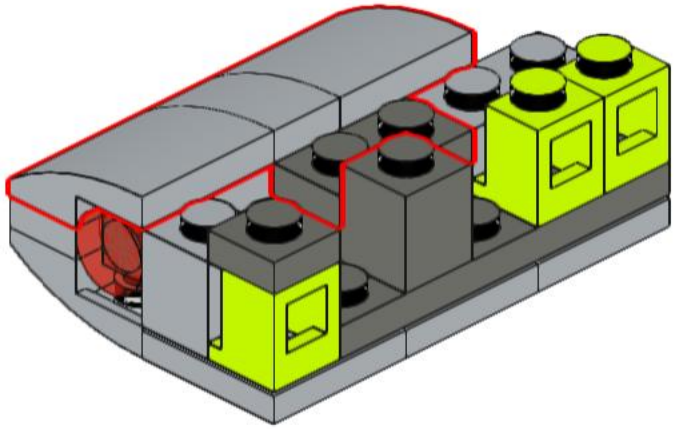

27

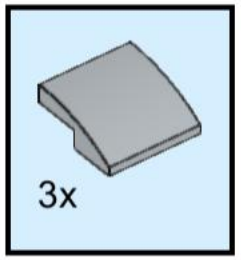

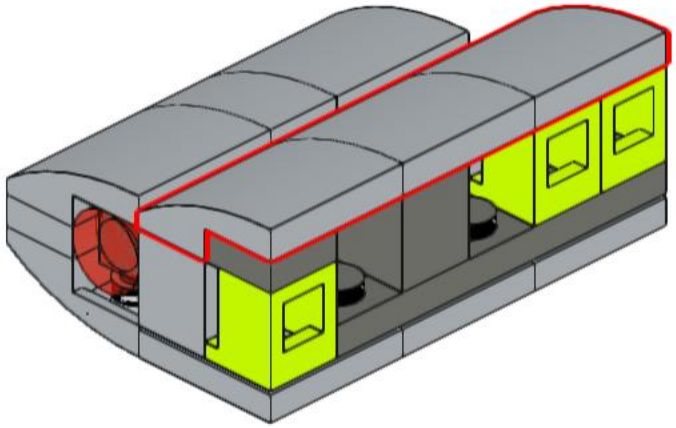

28

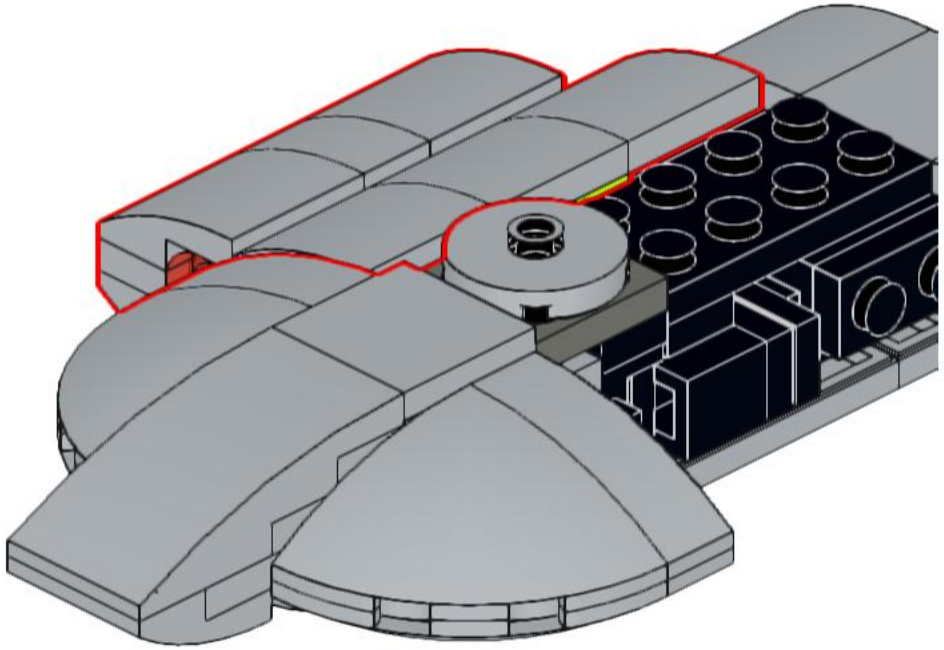

29

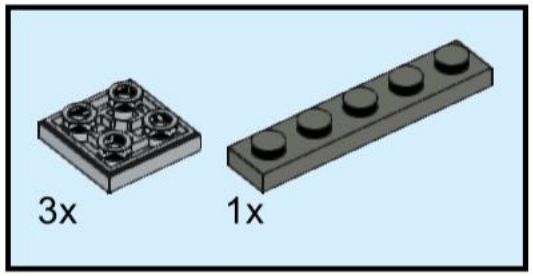

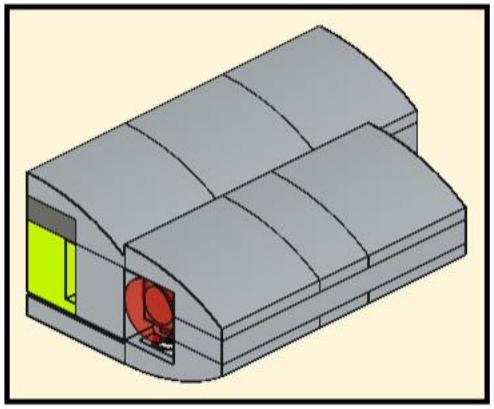

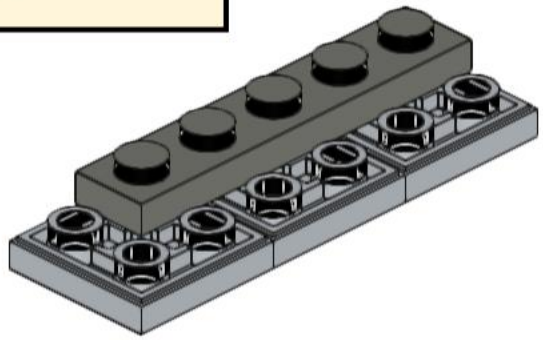

30

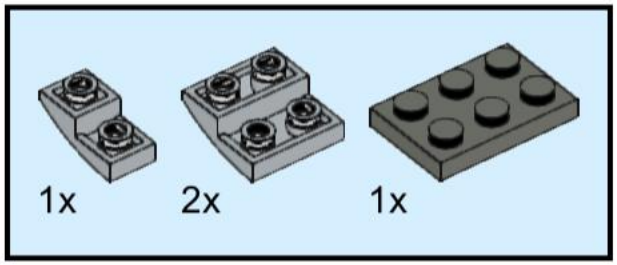

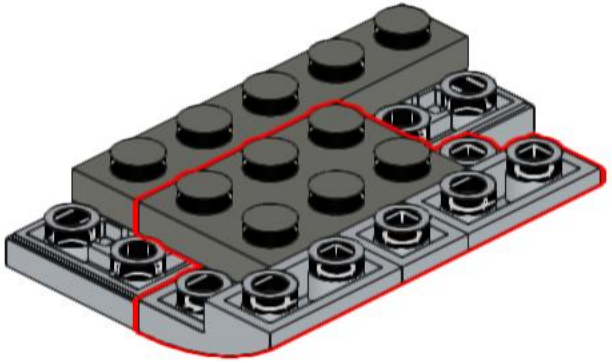

31

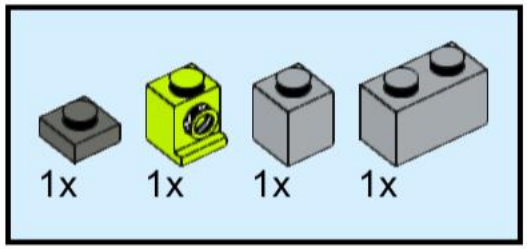

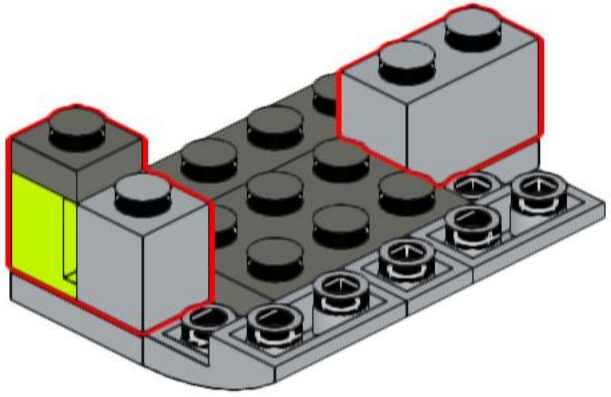

32

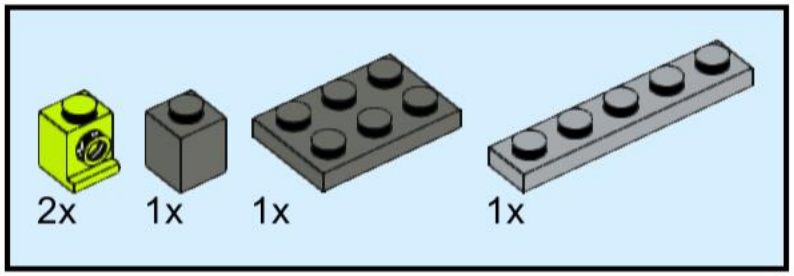

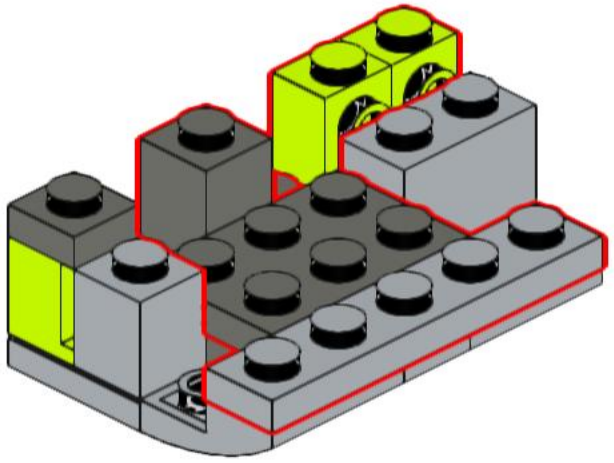

33

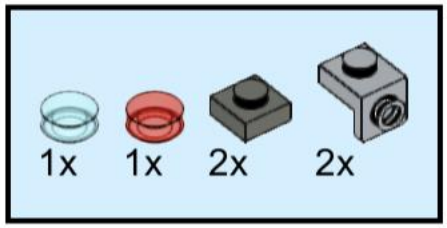

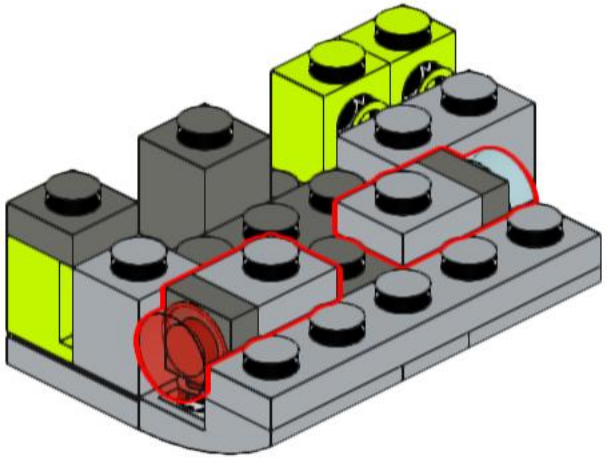

34

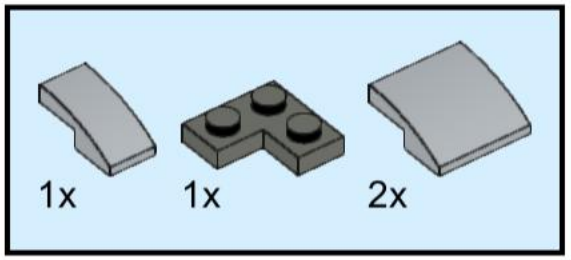

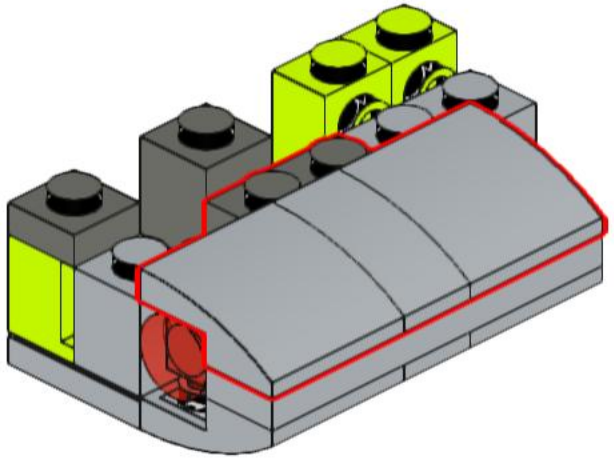

35

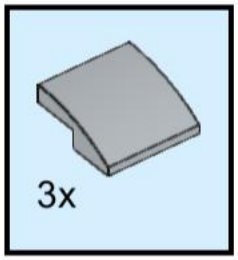

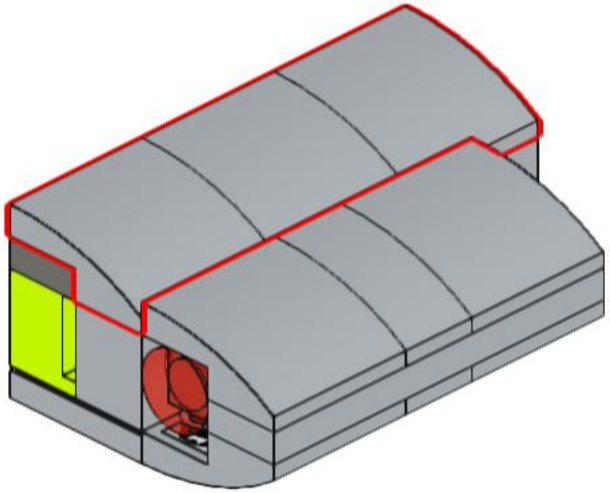

36

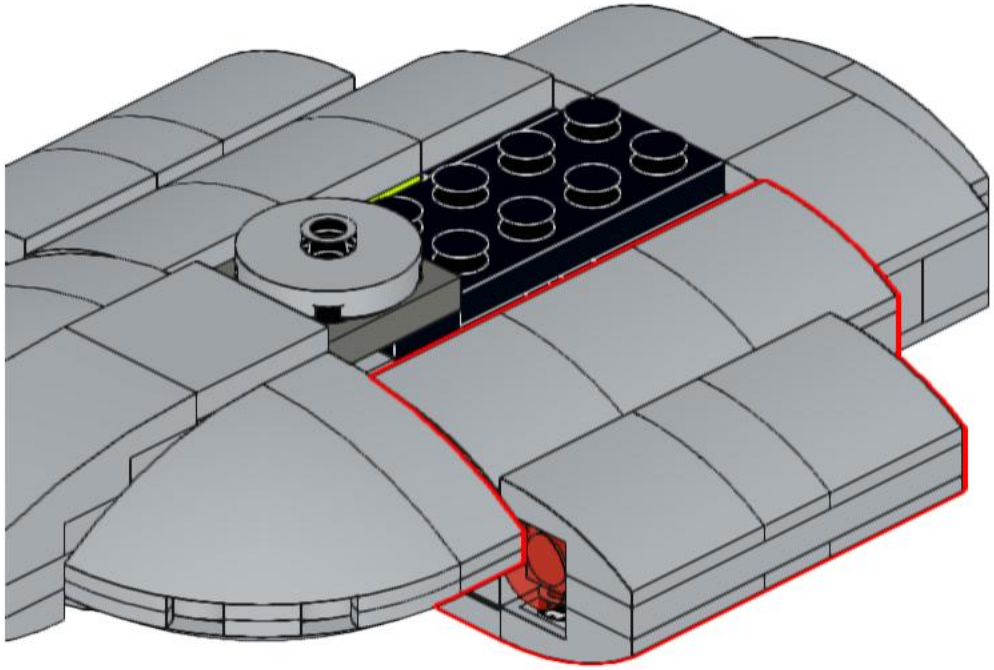

37

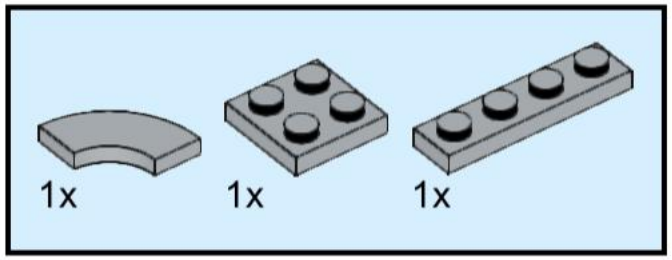

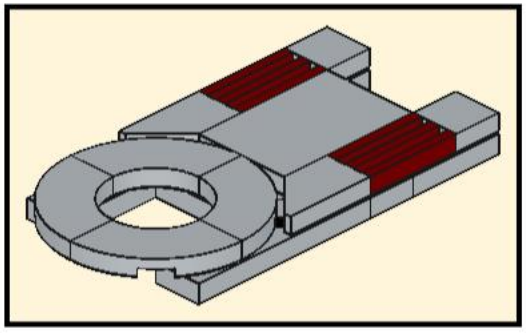

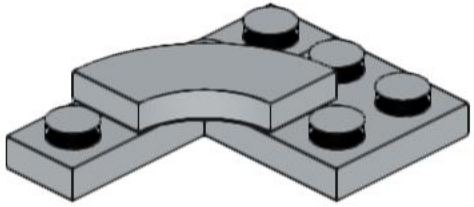

38

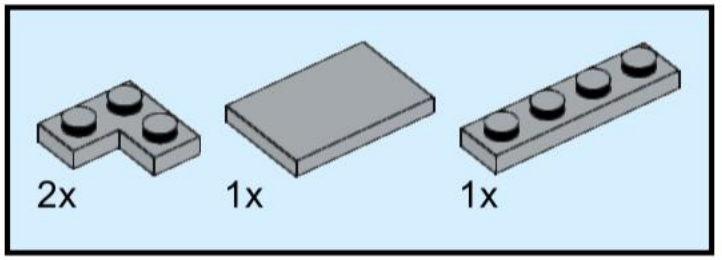

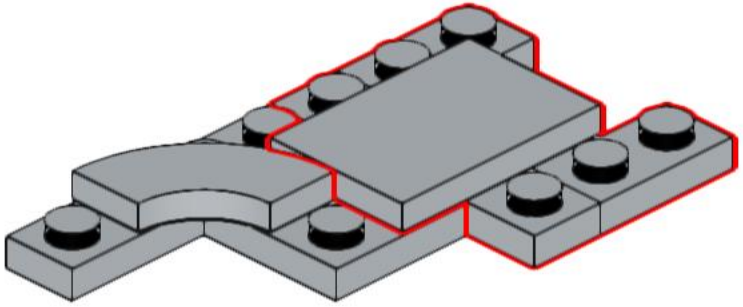

39

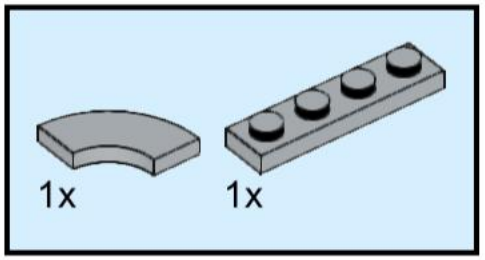

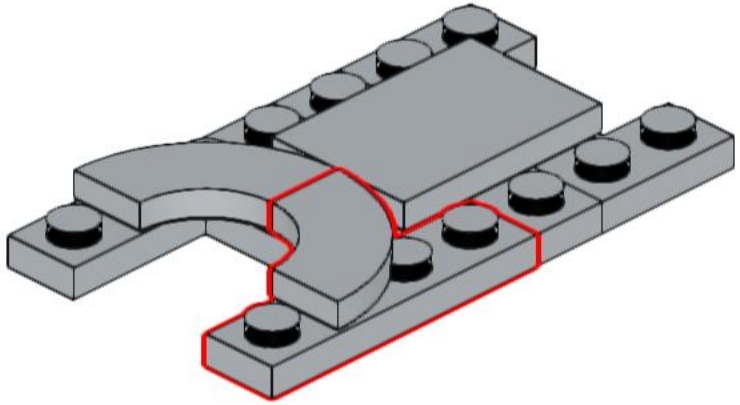

40

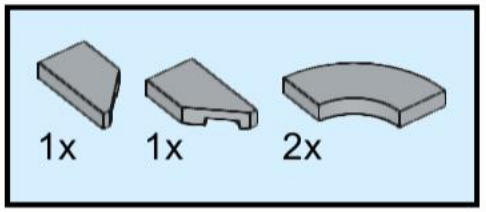

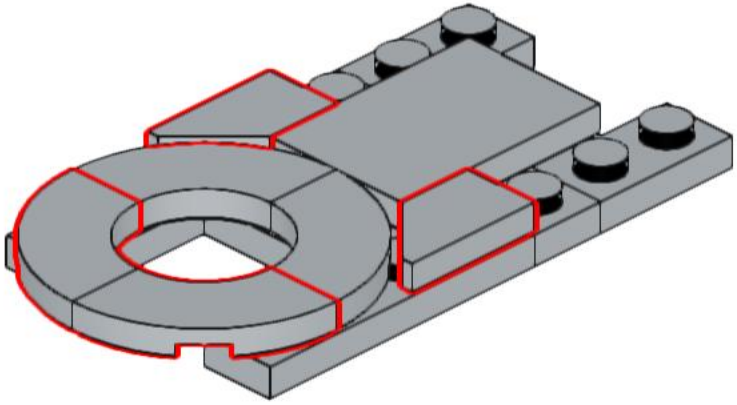

41

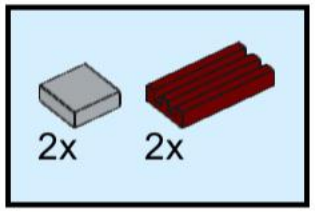

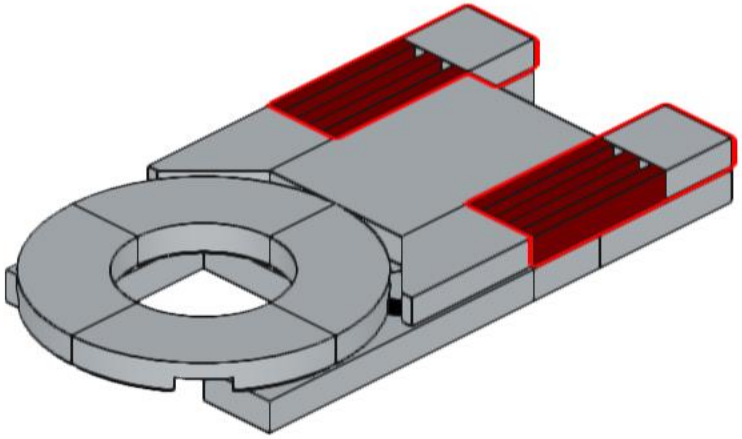

42

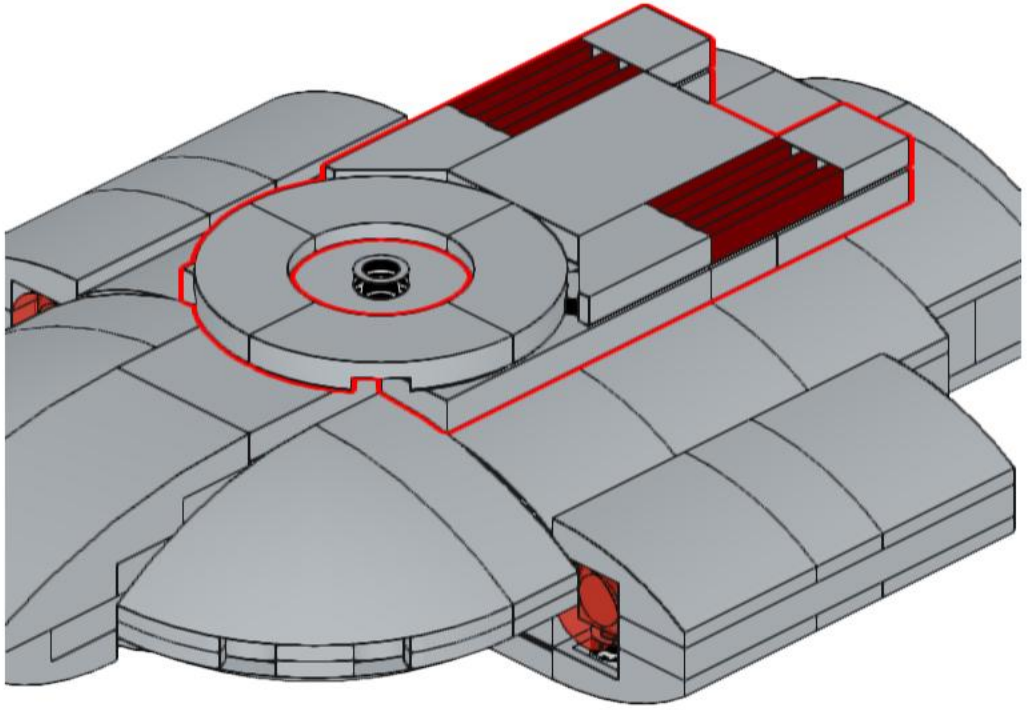

43

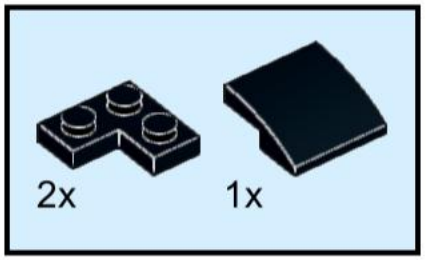

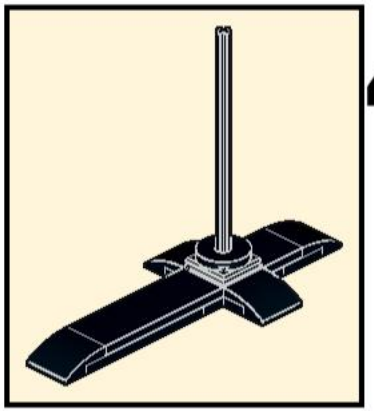

44

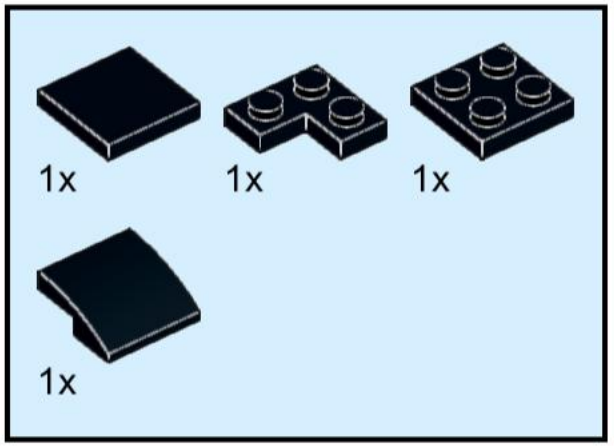

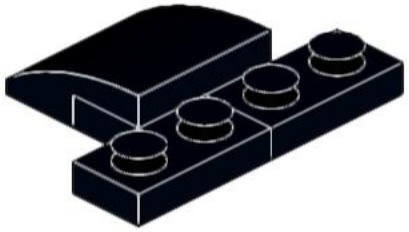

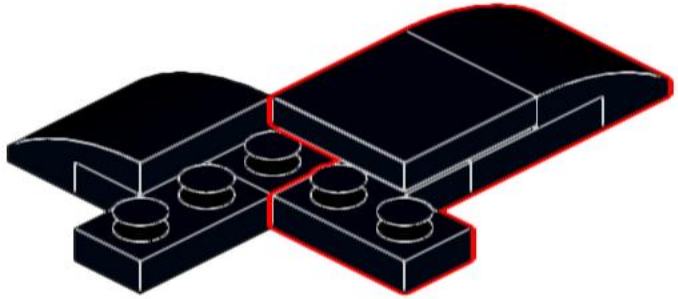

45

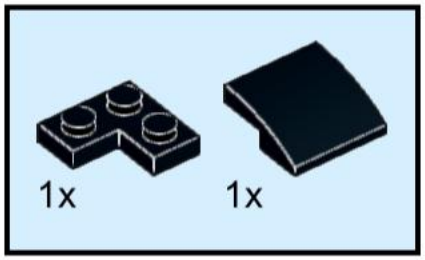

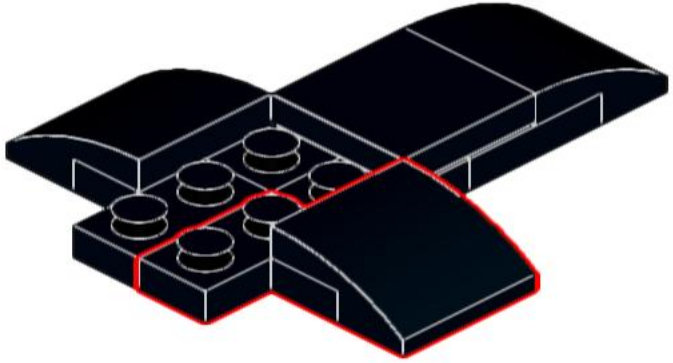

46

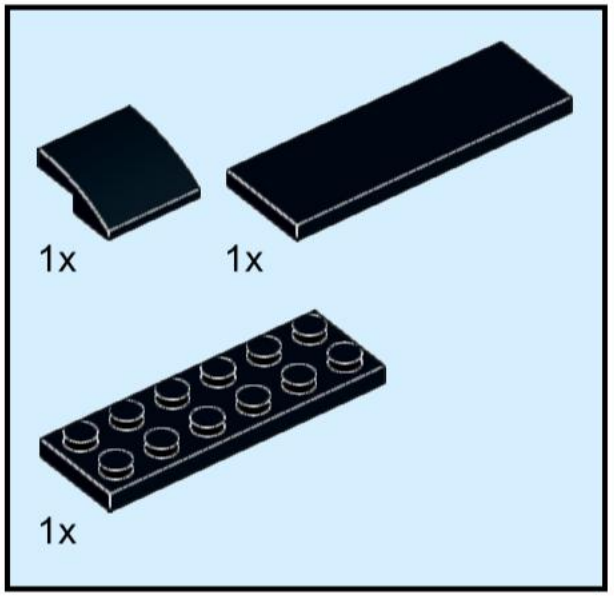

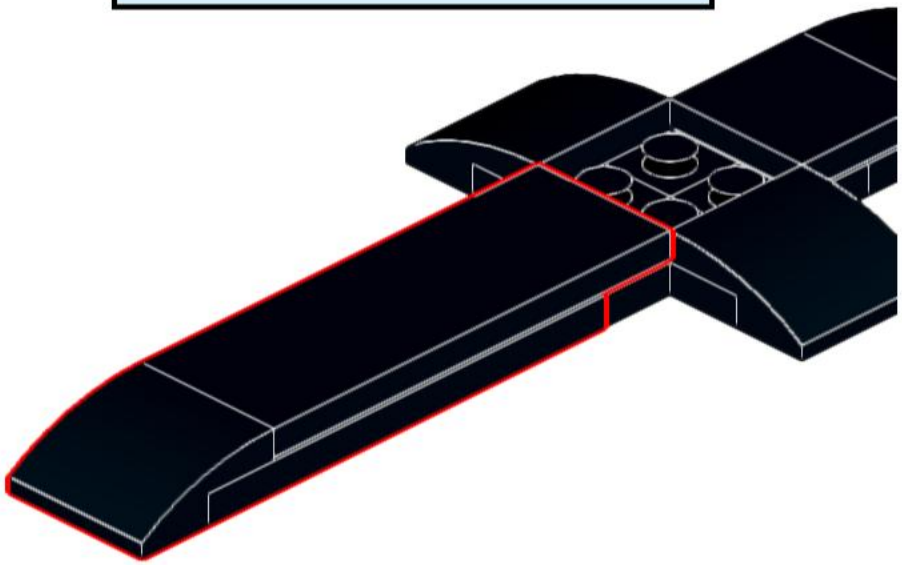

47

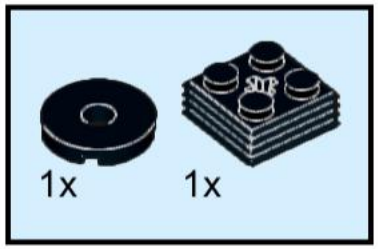

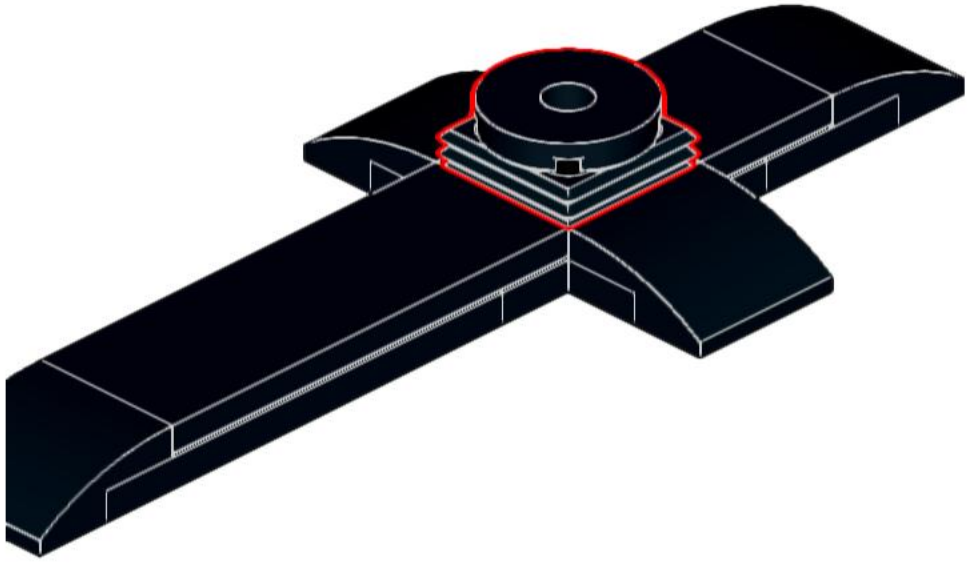

48

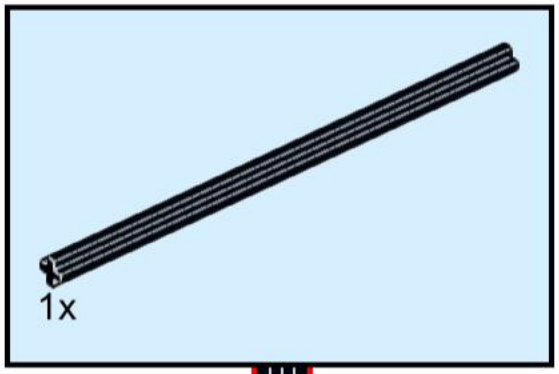

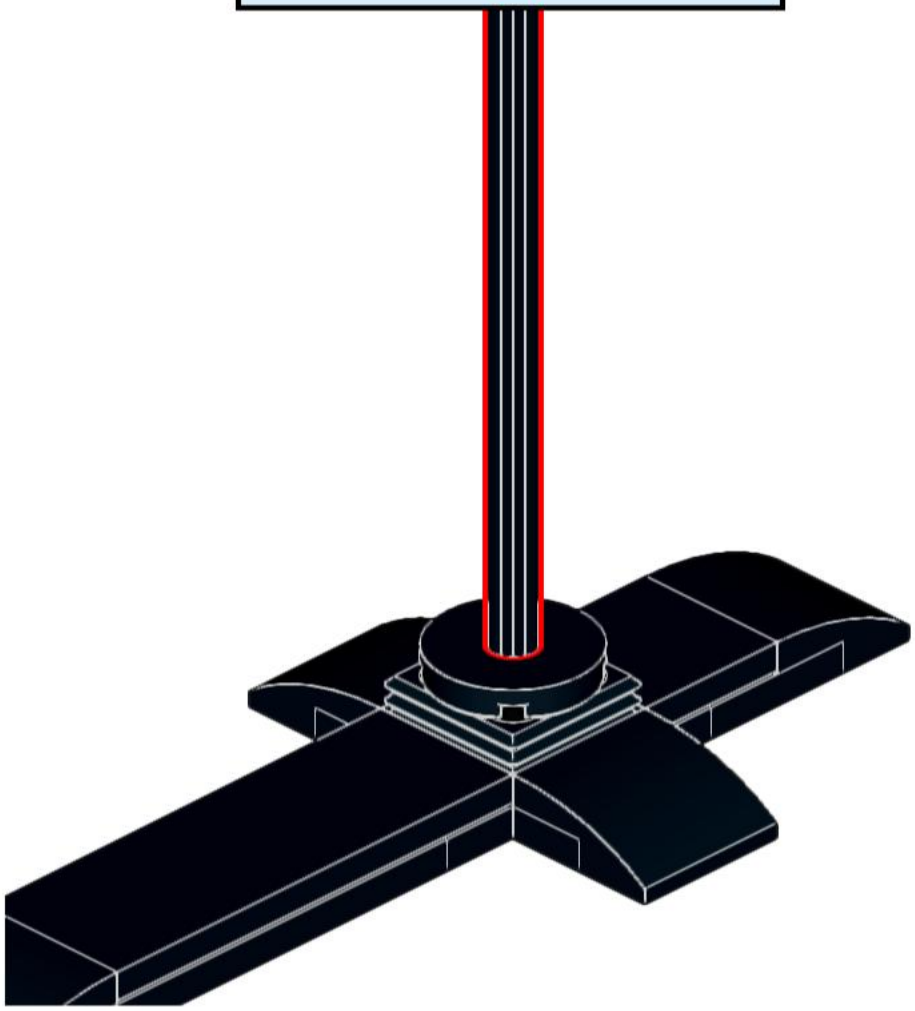

49

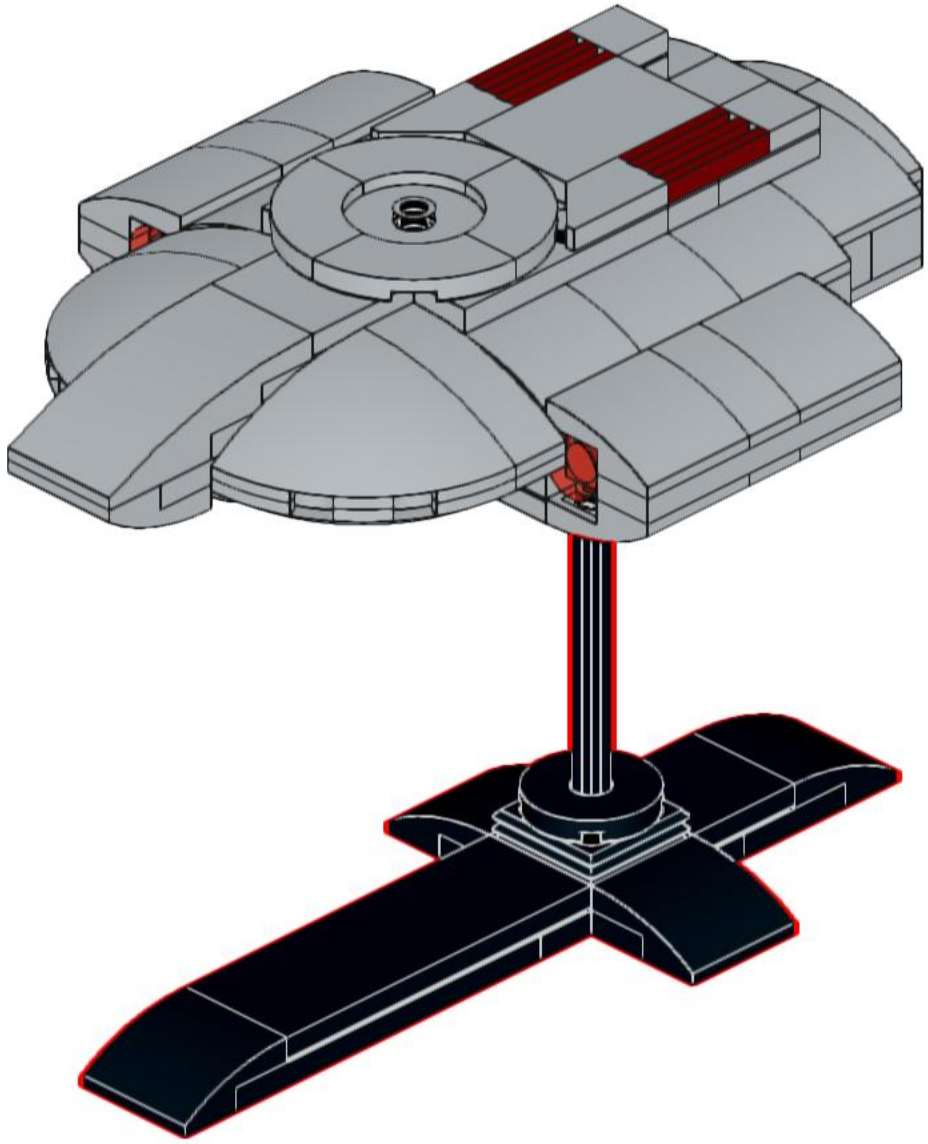



2x
87087
Black



1x
32064
Black



4x
2420
Black



1x
3623
Black



1x
3795
Black



1x
47905
Black

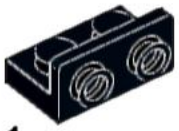

1x
99780
Black



1x
15535
Black

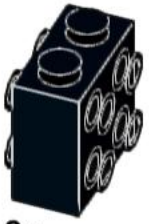

2x
80796
Black



1x
3794b
Black



2x
99781
Black



4x
15068
Black



1x
3020
Black



1x
3737
Black



4x
4081b
Black

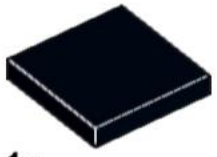

1x
3068
Black



1x
71752
Black



6x
3024
Dark Bluish Gray



8x
3023
Black



1x
3022
Black



1x
34103
Black



1x
69729
Black



4x
3005
Dark Bluish Gray



1x
86876
Dark Bluish Gray



1x
3710
Dark Bluish Gray

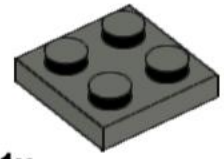

1x
3022
Dark Bluish Gray

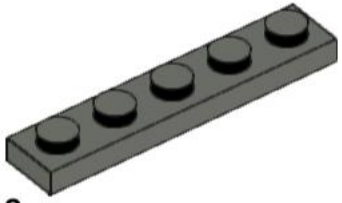

2x
78329
Dark Bluish Gray

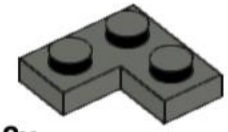

2x
2420
Dark Bluish Gray

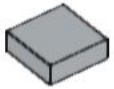

2x
3070
Light Bluish Gray

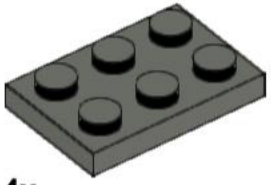

4x
3021
Dark Bluish Gray



1x
98138
Light Bluish Gray



1x
25269
Light Bluish Gray

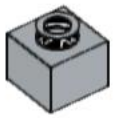

8x
86996
Light Bluish Gray

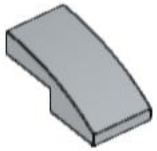

2x
11477
Light Bluish Gray

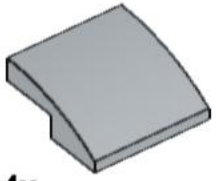

14x
15068
Light Bluish Gray



4x
27925
Light Bluish Gray

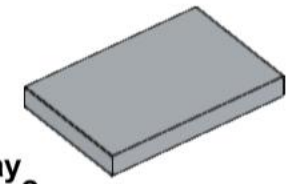

2x
26603
Light Bluish Gray

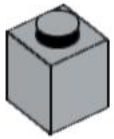

2x
3005
Light Bluish Gray

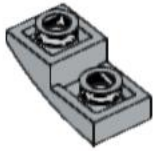

2x
24201
Light Bluish Gray

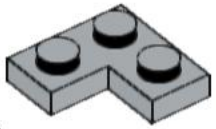

2x
2420
Light Bluish Gray

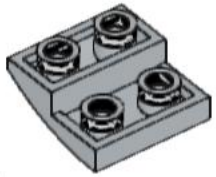

8x
32803
Light Bluish Gray

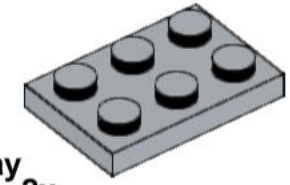

2x
3021
Light Bluish Gray



4x
36841
Light Bluish Gray

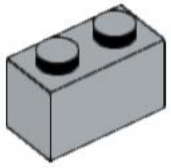

2x
3004
Light Bluish Gray

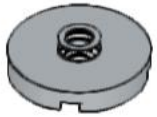

1x
18674
Light Bluish Gray

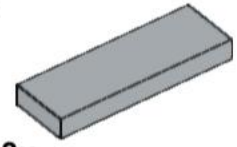

3x
63864
Light Bluish Gray

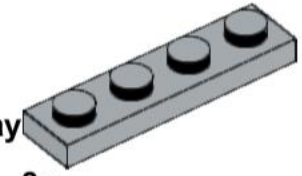

3x
3710
Light Bluish Gray



1x
5092
Light Bluish Gray

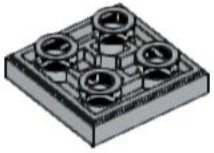

6x
11203
Light Bluish Gray

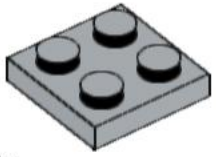

3x
3022
Light Bluish Gray

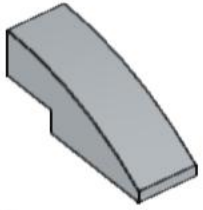

4x
50950
Light Bluish Gray

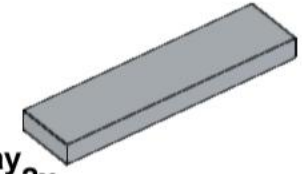

2x
2431
Light Bluish Gray



1x
5091
Light Bluish Gray

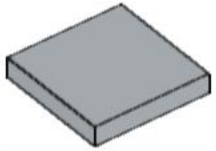

3x
3068
Light Bluish Gray

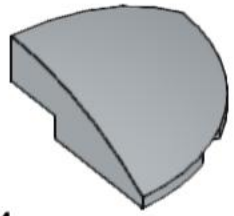

4x
76797
Light Bluish Gray

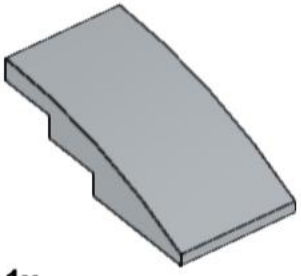

1x
93606
Light Bluish Gray

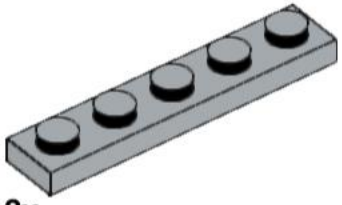

2x
78329
Light Bluish Gray



2x
2412b
Dark Red



6x
4070
Lime



2x
98138
Trans-Red



2x
98138
Trans-Light Blue